HYDRAULIC POWER PACKS

Dimensions

	A	B	C	D	E	F
ISM-10	200	400	245	460	310	110
ISM-25	300	500	325	610	400	200
ISM-50	350	600	430	780	500	250
ISM-75	500	750	430	890	630	380

	A	B	C	D	E	F
ISM-100	500	750	480	890	630	380
ISM-150	600	850	580	1120	730	480
ISM-200	600	850	680	1250	730	480
ISM-350	700	1010	725	1300	850	570

Description

Hydraulic power pack type ISM-*** equipped with vertical motor pump groups.
They allow the most varied solutions thanks to the easy realization of the circuits with CETOP-03 and CETOP-05 modular groups.

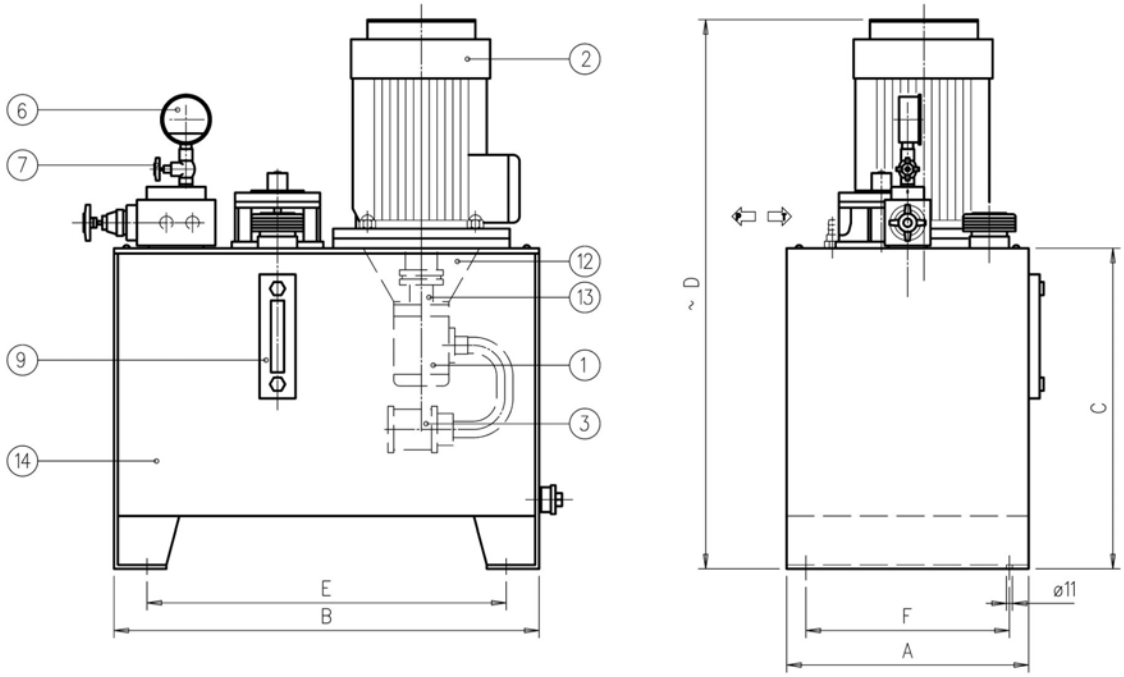

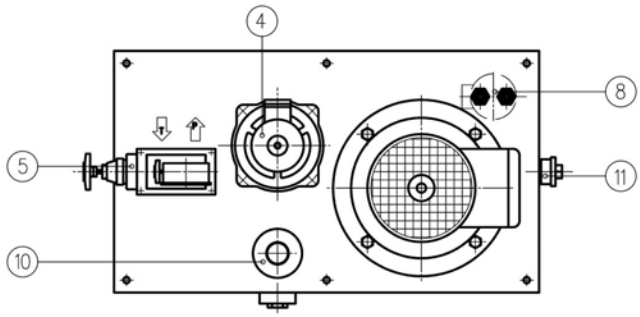

Pos.	Descrption
1	Pump
2	V1-shape electric motor
3	Suction filter
4	Return filter
5	Sub-plate equipped with pressure relief valve
6	Manometer
7	Needle valve
8	Heat Exchanger (upon request)
9	Oil level indicator
10	Filling cap
11	Breathing cap
12	Bell
13	Coupling
14	Oil reservoir

Ordering code

ISM - * * / * * - * *

- Electric motor power (KW)
- Pump capacity (c^3/rev)
- Reservoir capacity
- Type of power pack